Cambridge International AS & A Level

**Cambridge International Examinations**
Cambridge International Advanced Subsidiary and Advanced Level

| | | | | | | | | | |
|---|---|---|---|---|---|---|---|---|---|
| CANDIDATE NAME | | | | | | | | | |
| CENTRE NUMBER | | | | | | CANDIDATE NUMBER | | | | |

*6127130978*

**PHYSICS** **9702/53**

Paper 5 Planning, Analysis and Evaluation **October/November 2017**

**1 hour 15 minutes**

Candidates answer on the Question Paper.

No Additional Materials are required.

**READ THESE INSTRUCTIONS FIRST**

Write your Centre number, candidate number and name on all the work you hand in.
Write in dark blue or black pen.
You may use an HB pencil for any diagrams or graphs.
Do not use staples, paper clips, glue or correction fluid.
DO **NOT** WRITE IN ANY BARCODES.

Answer **all** questions.

Electronic calculators may be used.
You may lose marks if you do not show your working or if you do not use appropriate units.

At the end of the examination, fasten all your work securely together.
The number of marks is given in brackets [ ] at the end of each question or part question.

This document consists of **8** printed pages.


© UCLES 2017

CAMBRIDGE International Examinations

**1** A student is investigating the resistance of a light-dependent resistor (LDR) separated from a source of light by different depths of water as shown in Fig. 1.1.

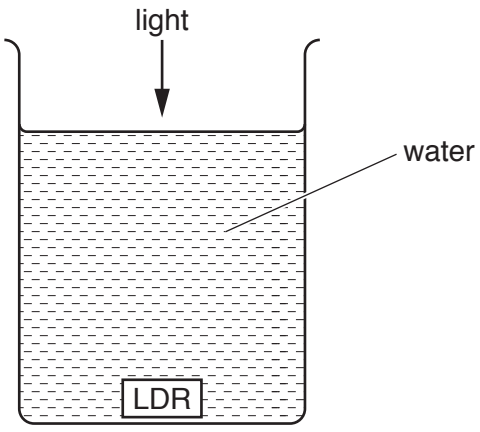


**Fig. 1.1**

It is suggested that the relationship between the resistance $R$ of the LDR and the depth $d$ of the LDR in the water is

$$R = \frac{4\pi d^2}{K}$$

where $K$ is a constant.

Design a laboratory experiment to test the relationship between $R$ and $d$. Explain how your results could be used to determine a value for $K$. You should draw a diagram, on page 3, showing the arrangement of your equipment. In your account you should pay particular attention to

- the procedure to be followed,
- the measurements to be taken,
- the control of variables,
- the analysis of the data,
- any safety precautions to be taken.

[15]

© UCLES 2017

**Diagram**

.....

.....

.....

.....

.....

.....

.....

.....

.....

.....

.....

.....

.....

.....

[Total: 15]

**2** A student is investigating how the forces acting on a bridge vary as the position of a load on the bridge is changed. The bridge is modelled as shown in Fig. 2.1 with two newton-meters providing the support forces.

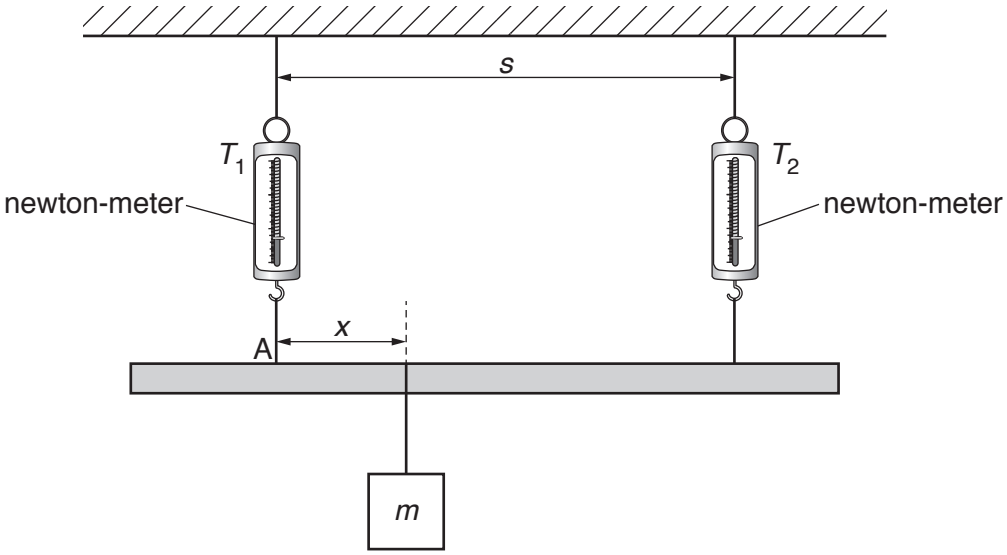


**Fig. 2.1**

A load of mass $m$ is placed at a distance $x$ from support A. The readings of the newton-meters $T_1$ and $T_2$ are recorded for different values of $x$.

It is suggested that $T_1$, $T_2$ and $x$ are related by the equation

$$T_1 - T_2 = \frac{mg(s - x) - mgx}{s}$$

where $s$ is the separation of the newton-meters and $g$ is the acceleration of free fall.

**(a)** A graph is plotted of $(T_1 - T_2)$ on the $y$-axis against $x$ on the $x$-axis.

Determine expressions for the gradient and the $y$-intercept.

gradient = .....

$y$-intercept = .....

[1]

**(b)** Values of $x$, $T_1$ and $T_2$ are given in Fig. 2.2.

| $x$/m | $T_1$/N | $T_2$/N | |
|---|---|---|---|
| 0.100 | 6.9 ± 0.1 | 1.4 ± 0.1 | |
| 0.160 | 6.4 ± 0.1 | 1.8 ± 0.1 | |
| 0.220 | 5.9 ± 0.1 | 2.3 ± 0.1 | |
| 0.280 | 5.5 ± 0.1 | 2.7 ± 0.1 | |
| 0.340 | 5.0 ± 0.1 | 3.1 ± 0.1 | |
| 0.400 | 4.6 ± 0.1 | 3.3 ± 0.1 | |

**Fig. 2.2**

Calculate and record values of $(T_1 - T_2)$/N in Fig. 2.2.
Include the absolute uncertainties in $(T_1 - T_2)$. [2]

**(c)** **(i)** Plot a graph of $(T_1 - T_2)$/N against $x$/m.
Include error bars for $(T_1 - T_2)$. [2]

**(ii)** Draw the straight line of best fit and a worst acceptable straight line on your graph. Both lines should be clearly labelled. [2]

**(iii)** Determine the gradient of the line of best fit. Include the absolute uncertainty in your answer.

gradient = ..... [2]

© UCLES 2017

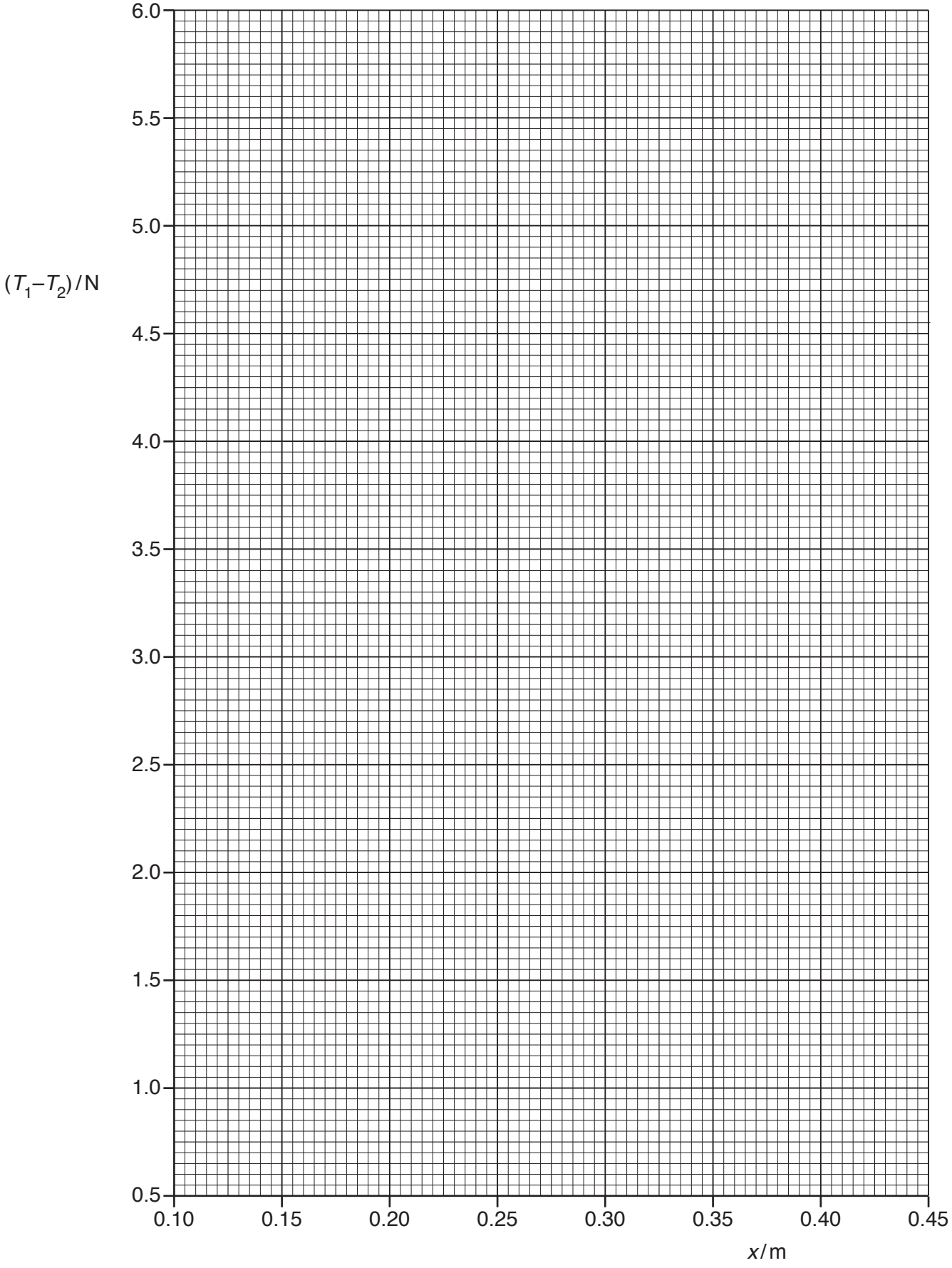
6.0
5.5
5.0
4.5
4.0
3.5
3.0
2.5
2.0
1.5
1.0
0.5
(T1–T2) / N
0.10
0.15
0.20
0.25
0.30
0.35
0.40
0.45
x / m

© UCLES 2017

**(iv)** Determine the *y*-intercept of the line of best fit. Include the absolute uncertainty in your answer.

*y*-intercept = ..... [2]

**(d) (i)** Using your answers to **(a)**, **(c)(iii)** and **(c)(iv)**, determine the values of *m* and *s*. Include appropriate units.

Data: $g = 9.81\,\text{m}\,\text{s}^{-2}$.

*m* = .....

*s* = .....
[2]

**(ii)** Determine the percentage uncertainties in *m* and *s*.

percentage uncertainty in *m* = ..... %

percentage uncertainty in *s* = ..... %
[2]

[Total: 15]

To avoid the issue of disclosure of answer-related information to candidates, all copyright acknowledgements are reproduced online in the Cambridge International Examinations Copyright Acknowledgements Booklet. This is produced for each series of examinations and is freely available to download at www.cie.org.uk after the live examination series.

© UCLES 2017